AD238A Datasheet

Zhuhai Jieli Technology Co.,LTD

Version 1.0

Date 2025.08.15

Copyright © Zhuhai Jieli Technology Co.,LTD. All rights reserved.

Revision History

Date	Revision	Description
2025.08.15	V1.0	Initial Release.

杰理科技 JIELI TECHNOLOGY

Copyright © 2025 Zhuhai Jieli Technology Co., LTD www.zh-jieli.com

Table of Contents

Revision History **1**
Table of Contents **2**
AD238A Features **3**
1 Block Diagram **4**
2 Pin Definition **5**
2.1 Pin Assignment 5
2.2 Pin Description 6
3 Electrical Characteristics **7**
3.1 Absolute Maximum Ratings 7
3.2 ESD Ratings 7
3.3 PMU Characteristics 7
3.4 IO Characteristics 8
3.5 Class-D Speaker Driver Characteristics 10
3.6 Audio ADC Characteristics 11
4 Package Information **12**
4.1 SOP8 12
5 IC Marking Information **13**
6 Solder-Reflow Condition **14**
7 Storage Condition **15**
7.1 Moisture Sensitivity Level 15
7.2 Storage Alert 15

Copyright © 2025 Zhuhai Jieli Technology Co., LTD www.zh-jieli.com

AD238A Features

SYSTEM

- 32bit Dual-Issue DSP 288MHz
- With IEEE754 Single precision FPU
- Support FFT/MATH
- Support NPU
- I-cache and Ro-cache
- On-chip SRAM 184kbyte (share Cache 32k)
- Support MMU
- Support MPU
- NOR Flash controller
- Internal RC oscillator,PLL

Audio

- 1 x 16bit Class-D Speaker Driver
  - SNR 105dB
  - Sampling rate 8~96kHz
  - Drive specker directly 1.2W@4Ω
- 1 x 16bit ADC
  - SNR 93dB
  - Sampling rate 8~96kHz

Peripherals

- 1 x Full speed USB
- 1 x SD host controller
- 3 x Multi-function 16bit timer
- 1 x Advance multi-function 16bit timer
- 2 x UART interface
- 1 x I^2C Master/Slave interface
- 3 x SPI Master/Slave interface
- 1 x Rotate Decoder
- 1 x 10bit GPADC
- 4x GPIO Support function remapping
- 2 x LP_Touch with low power wake up

PMU

- Soft off current: <3uA
- Music mode: <6mA@HSB 96M
- LVD range(3bit):1.7V~2.4V, step100mV
- HPVDD range 1.8V to 5.5V
- VPWR range 1.8V to 5.5V
- IOVDD range 2.1V to 3.6V

Packages

- SOP8

Temperature

- Operating temperature
  TC = -20℃ to +85℃(standard range)
  TC = -40℃ to +105℃(extended range)
- Storage temperature -65℃ to +150℃

Applications

- Voice controller
- Audio player
- Sound toy

Copyright © 2025 Zhuhai Jieli Technology Co., LTD www.zh-jieli.com

1 Block Diagram

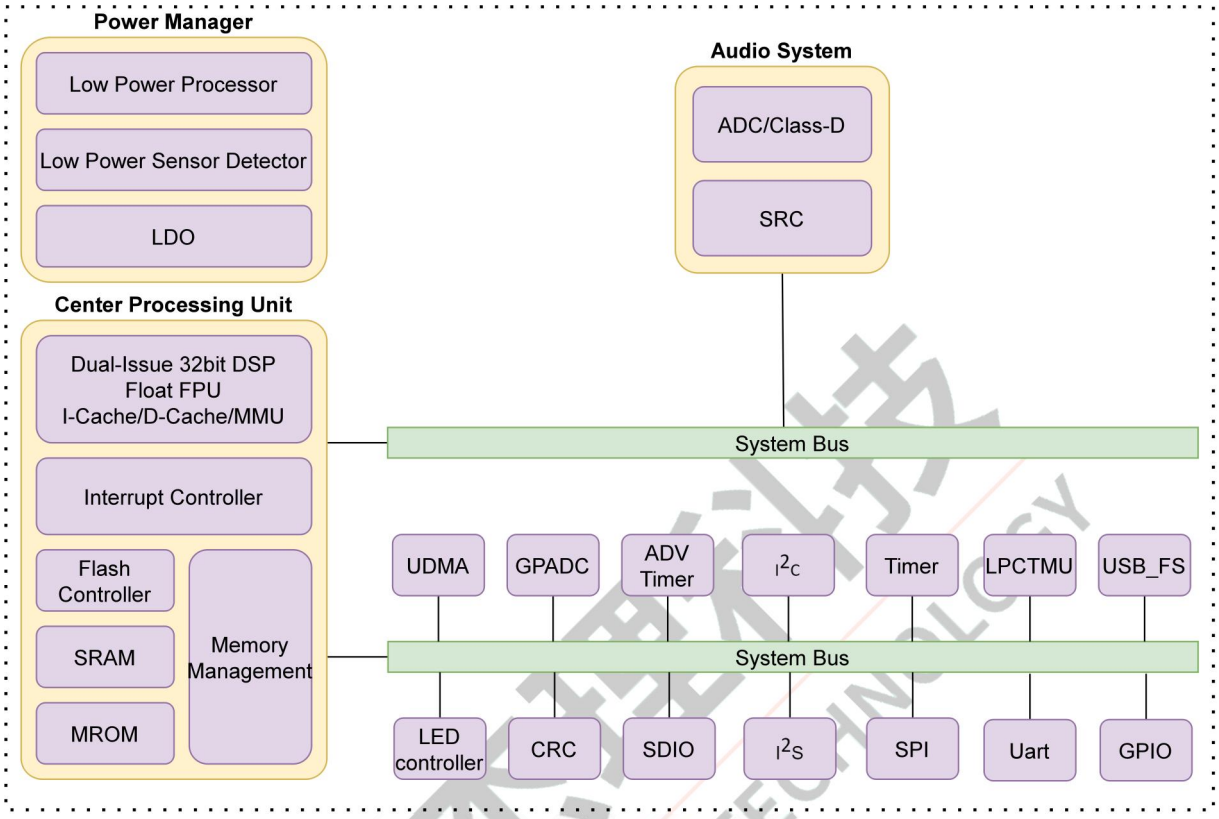

Figure 1-1 AD238A Block Diagram

Copyright © 2025 Zhuhai Jieli Technology Co., LTD www.zh-jieli.com

2 Pin Definition

2.1 Pin Assignment

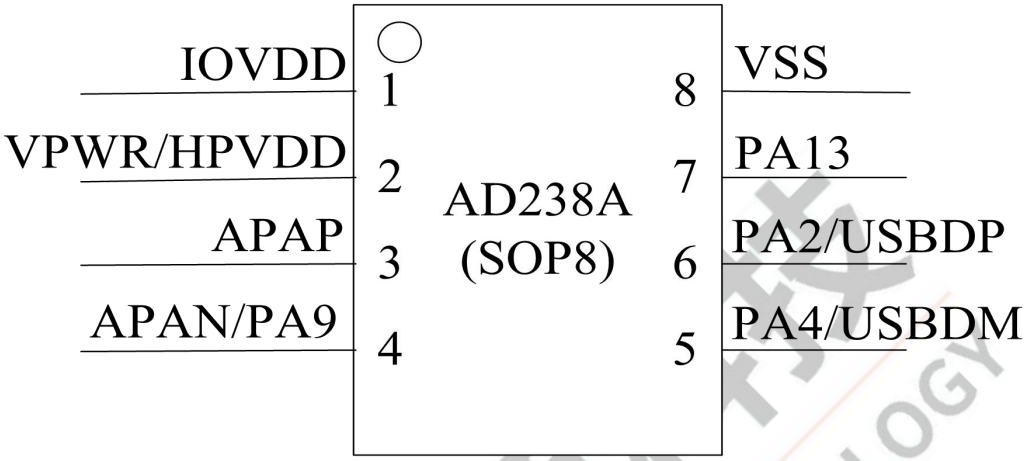

Figure 2-1 AD238A Pin Assignment

Copyright © 2025 Zhuhai Jieli Technology Co., LTD www.zh-jieli.com

2.2 Pin Description

Table 2-2-1 AD238A Pin Description

Pin No.	Name	Type	IO Initial State	Description
1	IOVDD	P	--	IO Power
2	VPWR	P	--	Chip main power supply
	HPVDD	P	--	Audio Power
3	APAP	O	--	Class-D Speaker Driver Positive Output
4	APAN	O	--	Class-D Speaker Driver Negative Output
	PA9	I/O(HVT)	10kΩ Pull-down	1/2 Voltage to ADC Firmware Download Interface
5	USBDM	I/O	15kΩ Pull-down	USB Negative Data ADC5(ADC Input Channel 5)
	PA4	I/O	Z	ADC6(ADC Input Channel 6) LP_TOUCH2(TOUCH_CH2)
6	USBDP	I/O	15kΩ Pull-down	USB Positive Data ADC4(ADC Input Channel 4)
	PA2	I/O	Z	ADC2(ADC Input Channel 2) LP_TOUCH0(TOUCH_CH0)
7	PA13	I/O	Z	MIC_A0(Audio Mic Input) MICBIAS(MIC Bias Output)
8	VSS	G	--	Ground

Note

1.IO initial state abbreviations Z--High resistance, H--High level, L--Low level, X--May be changed during power on.

2.Timer, AdvTimer, Rotate Decoder, UART, I^2C, I^2S, SPI1/2 and SDIO functions can be remapped to any I/O.

Table 2-2-2 Pin Types Description

Pin Type	Description	Pin Type	Description
P	Power	I/O	Input or Output
G	Ground	I	Input
NIO	NOR Flash IO	O	Output

Copyright © 2025 Zhuhai Jieli Technology Co., LTD www.zh-jieli.com

3 Electrical Characteristics

3.1 Absolute Maximum Ratings

Table 3-1 Absolute Maximum Ratings

Symbol	Parameter	Min	Max	Unit
Topt	Operating temperature	-20	+85	℃
Tstg	Storage temperature	-65	+150	℃
VPWR	Supply Voltage	-0.3	6	V
HPVDD		-0.3	6	V
IOVDD		-0.3	3.6	V
GPIO	Input voltage of GPIO (except PA9)	-0.3	3.6	V
HVTIO	Input voltage of HVT-IO (PA9)	-0.3	5.5	V

Note

1.Stresses beyond those listed under absolute maximum ratings may cause permanent damage to the device.

3.2 ESD Ratings

Table 3-2 ESD Ratings

Parameter	Typ	Test pin	Reference standard
Human Body Mode	±4kV	All pins	JEDEC EIA/JESD22-A114
Machine Mode	±300V	All pins	JEDEC EIA/JESD22-A115
Charge Device Model	±1kV	All pins	ANSI/ESDA/JEDEC JS-002-2022

3.3 PMU Characteristics

Table 3-3 PMU Characteristics

Symbol	Parameter	Conditions	Min	Typ	Max	Unit
VPWR	Power supply	--	1.8	5	5.5	V
Operating mode						
Symbol	**Parameter**	**Conditions**	**Min**	**Typ**	**Max**	**Unit**
IOVDD	Voltage output	--	--	3	--	V
	Loading current	IOVDD=3.0V@VPWR = 3.7V	--	--	120	mA
Low Power mode						
Symbol	**Parameter**	**Conditions**	**Min**	**Typ**	**Max**	**Unit**
IOVDD	Loading current	IOVDD=3.0V@VPWR = 3.7V	--	--	10	mA

Note

1. When powered by two dry batteries, the VPWR needs to be merged with IOVDD.

Copyright © 2025 Zhuhai Jieli Technology Co., LTD www.zh-jieli.com

3.4 IO Characteristics

Table 3-4 IO Characteristics

Input Characteristics						
Symbol	**Parameter**	**Conditions**	**IO**	**Min**	**Max**	**Unit**
V_{IL}	Low-Level Input Voltage	IOVDD = 3.0V	PA2,PA4,PA9,PA13 USBDP USBDM	-0.3	1.3	V
V_{IH}	High-Level Input Voltage	IOVDD = 3.0V	PA2,PA4,PA13 USBDP USBDM	1.7	3.3	V
		IOVDD = 3.0V	PA9	1.7	5.5	V
Output Characteristics						
Symbol	**Parameter**	**Conditions**	**IO**	**Typ**		**Unit**
$\lvert I_{OL} \rvert$	Output Current	IOVDD = 3.0V Voutput = 0.3V	PA2,PA4,PA13	1(HD=0) 4(HD=1) 8(HD=2) 31(HD=3)		mA
		IOVDD = 3.0V Voutput = 0.3V	PA9	1(HD=0) 4(HD=1) 8(HD=2) 9(HD=3)		mA
		IOVDD = 3.0V Voutput = 0.3V	USBDP USBDM	10		mA
$\lvert I_{OH} \rvert$	Output Current	IOVDD = 3.0V Voutput = 2.7V	PA2,PA4,PA13	1(HD=0) 4(HD=1) 8(HD=2) 31(HD=3)		mA
		IOVDD = 3.0V Voutput = 2.7V	PA9	1(HD=0) 4(HD=1) 8(HD=2) 9(HD=3)		mA
		IOVDD = 3.0V Voutput = 2.7V	USBDP USBDM	10		mA
Internal Resistance Characteristics						
Symbol	**Parameter**	**Conditions**	**IO**	**Typ**		**Unit**
R_{pu}	Pull-up Resistance	IOVDD = 3.0V	PA2,PA4 PA9,PA13 USBDP USBDM	10k(PU=1) 200k(PU=2) 1M(PU=3)		Ω
			USBDP	1.5k		Ω
			USBDM	180k		Ω

Copyright © 2025 Zhuhai Jieli Technology Co., LTD www.zh-jieli.com

Rpd	Pull-down Resistance	IOVDD = 3.0V	PA2,PA4 PA9,PA13 USBDP USBDM	10k(PD=1) 200k(PD=2) 1M(PD=3)	Ω
			USBDP USBDM	15k	Ω

Note

1.Internal pull-up/pull-down resistance accuracy ±20%

杰理科技 JIELI TECHNOLOGY

Copyright © 2025 Zhuhai Jieli Technology Co., LTD www.zh-jieli.com

3.5 Class-D Speaker Driver Characteristics

Table 3-5 Class-D Speaker Driver Characteristics Under HPVDD 3.7v

Parameter	Conditions	Min	Typ	Max	Unit
Resolution	--	--	16	--	bits
Output Sample Rate	--	8	--	96	kHz
SNR	Differential Mode Fin=1kHz@0dBFS Fs=48kHz B/W=20Hz~20kHz A-Weighted Equivalent load impedance =8Ω	--	105	--	dB
Dynamic Range	Differential Mode Fin=1kHz@0dBFS Fs=48kHz B/W=20Hz~20kHz A-Weighted Equivalent load impedance =8Ω	--	85	--	dB
THD+N	Differential Mode Fin=1kHz@0dBFS Fs=48kHz B/W=20Hz~20kHz A-Weighted Equivalent load impedance =8Ω	--	-36	--	dB
Noise Floor	Differential Mode B/W=20Hz~20kHz A-Weighted Equivalent load impedance =8Ω	--	15	--	uVrms
Max Output Power	Differential Mode Fin=1kHz@0dBFS Fs=48kHz B/W=20Hz~20kHz A-Weighted Equivalent load impedance =4Ω	--	0.5	1.2	W

Copyright © 2025 Zhuhai Jieli Technology Co., LTD www.zh-jieli.com

3.6 Audio ADC Characteristics

Table 3-6 Audio ADC Characteristics Under VPWR 3.7v

Parameter	Conditions	Min	Typ	Max	Unit
Resolution	--	--	16	--	bits
Input Sample Rate	--	8	--	96	kHz
SNR	Single-ended input Mode Fin=1kHz@0dBFS Fs=44.1kHz B/W=20Hz~20kHz A-Weighted ADC gain=0dB	--	92@VCM cap 89@VCM capless	--	dB
Dynamic Range	Single-ended input Mode Fin=1kHz@-60dBFS Fs=44.1kHz B/W=20Hz~20kHz A-Weighted ADC gain=0dB	--	92@VCM cap 89@VCM capless	--	dB
THD+N	Single-ended input Mode Fin=1kHz@0dBFS Fs=44.1kHz B/W=20Hz~20kHz A-Weighted ADC gain=0dB	--	-80	--	dB
Analogue Gain	--	-3	--	27	dB
Max Input Level	Single-ended input Mode ADC gain=0dB	--	0.3	--	Vrms

Copyright © 2025 Zhuhai Jieli Technology Co., LTD www.zh-jieli.com

4 Package Information

4.1 SOP8

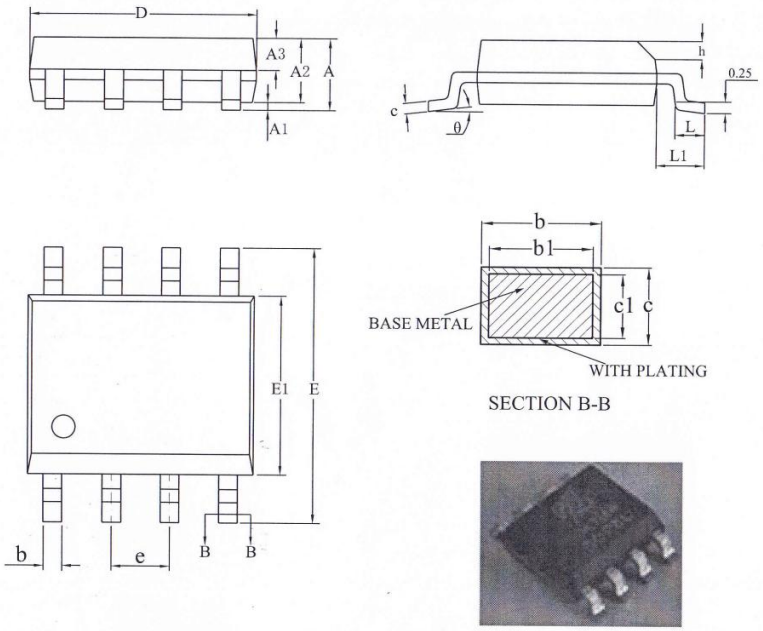

	SYMBOL	MILLIMETER		
		MIN	NOM	MAX
	A	—	—	1.75
	A1	0.10	—	0.225
	A2	1.30	1.40	1.50
	A3	0.60	0.65	0.70
1	b	0.39	—	0.47
1	b1	0.38	0.41	0.44
1	c	0.20	—	0.24
	c1	0.19	0.20	0.21
1	D	4.80	4.90	5.00
	E	5.80	6.00	6.20
1	E1	3.80	3.90	4.00
	e	1.27BSC		
	h	0.25	—	0.50
	L	0.50	—	0.80
	L1	1.05REF		
	θ	0	—	8°

Figure 4-1 AD238A Package

Copyright © 2025 Zhuhai Jieli Technology Co., LTD www.zh-jieli.com

5 IC Marking Information

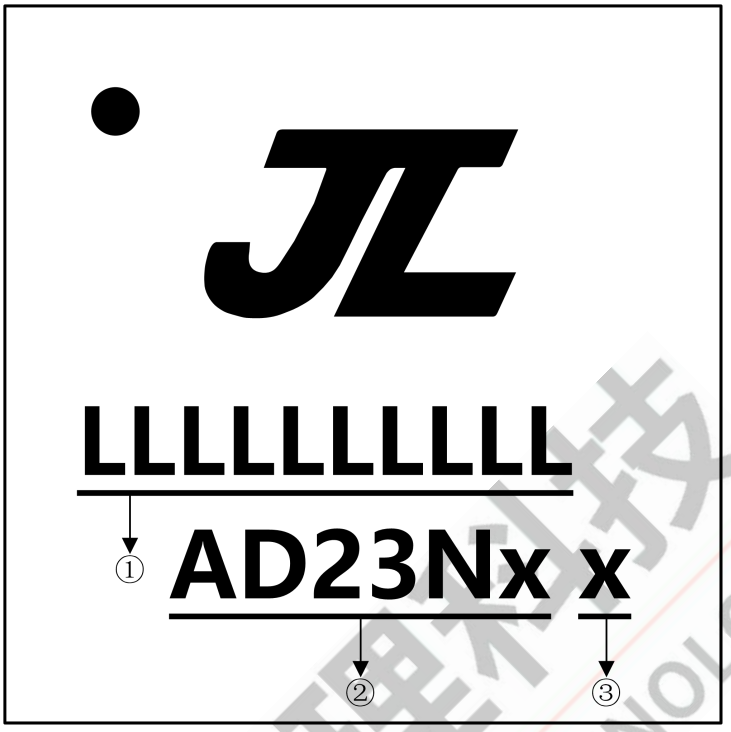

Figure 5-1 AD238A Package Outline

① LLLLLLLLL Production Batch
② AD23Nx Chip Model
③ x Built-in flash size
0: No Flash Memory
2: 2Mbit Flash
4: 4Mbit Flash
8: 8Mbit Flash
6: 16Mbit Flash
3: 32Mbit Flash
5: 64Mbit Flash
7: 128Mbit Flash

Copyright © 2025 Zhuhai Jieli Technology Co., LTD www.zh-jieli.com

6 Solder-Reflow Condition

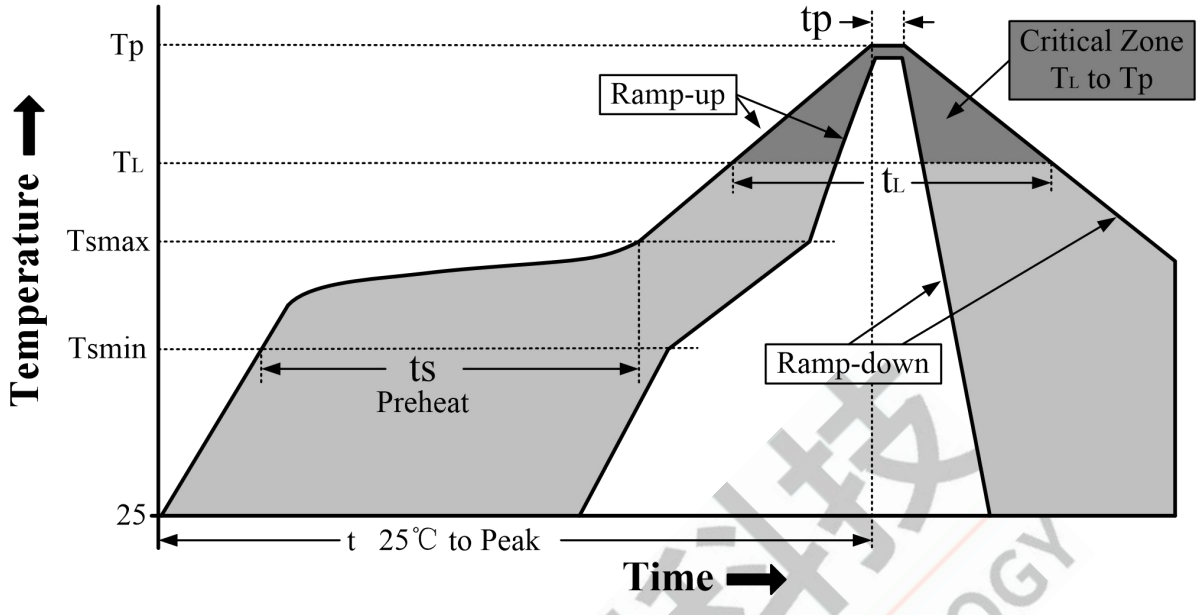

Figure 6-1 Classification Reflow Profile

Table 6-1 Classification Profiles

Profile Feature		Sn-Pb Eutectic Assembly	Pb-Free Assembly
Preheat/Soak	Temperature Min (T_{smin})	100℃	150℃
	Temperature Max (T_{smax})	150℃	200℃
	Time (ts) from (T_{smin} to T_{smax})	60-120 seconds	60-180 seconds
Average ramp-up rate (T_{smax} to T_p)		3℃/second max	3℃/second max
Liquidous temperature (T_L) Time (t_L) maintained above T_L		183℃ 60-150 seconds	217℃ 60-150 seconds
Peak package body temperature (T_p)		See Table 6-2	See Table 6-3
Time within 5℃ of actual Peak Temperature (tp)[2]		10-30 seconds	20-40 seconds
Ramp-down rate (T_p to T_L)		6℃/second max	6℃/second max
Time 25℃ to peak temperature		6 minutes max	8 minutes max

Note

1.All temperatures refer to topside of the package, measured on the package body surface

2.Time within 5℃ of actual peak temperature (tp) specified for the reflow profiles is a "supplier" and "user" maximum.

Table 6-2 SnPb Classification Temperature

Package Thickness	Volume mm³ < 350	Volume mm³ ≥ 350
<2.5 mm	240 +0/-5℃	225 +0/-5℃
≥2.5 mm	225 +0/-5℃	225 +0/-5℃

Copyright © 2025 Zhuhai Jieli Technology Co., LTD www.zh-jieli.com

Table 6-3 Pb-free - Classification Temperature

Package Thickness	Volume mm^3 < 350	Volume mm^3 350 - 2000	Volume mm^3 > 2000
< 1.6mm	260℃	260℃	260℃
1.6 mm - 2.5mm	260℃	250℃	245℃
> 2.5mm	250℃	245℃	245℃

Note

1.*Tolerance The device manufacturer/supplier shall assure process compatibility up to and including the stated classification temperature (this means Peak reflow temperature +0℃.For example 260℃+0℃)at the rated MSL level.

7 Storage Condition

7.1 Moisture Sensitivity Level

AD23N is qualified to moisture sensitivity level MSL3 in accordance with JEDEC J-STD-033.

7.2 Storage Alert

1. Calculated shelf life in sealed bag 12 months at＜40°C and 90% relative humidity (RH).
2. Peak package body temperature≤260°C.
3. After bag is opened,devices that will be subjected to reflow solder or other high temperature process must be mounted within 168 hours of factory conditions≤30°C/60%RH or stored per J-STD-033.
4. Devices require bake before mounting if humidity indicator card reads＞10% for level 2a-5a devices or＞60% for level 2 devices when read at 23±5°C,or 3a or 3b are not met.

Please refer to IPC/JEDEC J-STD-033 for baking procedure if necessary.

Copyright © 2025 Zhuhai Jieli Technology Co., LTD www.zh-jieli.com